DIVISION OF HIGHWAYS
BOARD OF TRANSPORTATION

SUBDIVISION ROADS

MINIMUM CONSTRUCTION STANDARDS

January 1, 2000

DAVID McCOY
SECRETARY OF THE DEPARTMENT OF TRANSPORTATION
TELEPHONE (919) 733-2520
RALEIGH, NORTH CAROLINA

LEN A. SANDERSON, P.E.
STATE HIGHWAY ADMINISTRATOR
TELEPHONE (919) 733-7384
RALEIGH, NORTH CAROLINA

J. D. GOINS, P.E.
CHIEF ENGINEER - OPERATIONS
TELEPHONE (919) 733-7621
RALEIGH, NORTH CAROLINA

TABLE OF CONTENTS

PAGE

Division of Highways Division Engineers 2
Division of Highways District Offices 4
Application Requirements 10
Subdivision Roads
A. Definitions 12
B. Addition of Subdivision Roads to the System 13
Utility Requirements 16
Minimum Design and Construction Criteria
For Subdivision Roads 18
I. Construction Requirements 18
A. Drainage 18
B. Bridges and Dams 19
C. Curb and Gutter and Sidewalk 21
D. Wheel Chair Ramps 22
E. Pavement Designs 22
F. Traffic Control 24
G. Guardrail 24
H. Road Intersections 24
I. Islands or Short Medians at Subdivision Entrances 24
J. Subdivision Name Markers 25
K. Minimum Design Criteria 26
1. Local Residential Subdivision Roads 26
2. Residential Collector Roads 27
3. Thoroughfare Plan Roads 28
4. Industrial Access or Commercial Complex Roads 28
NC General Statute §136-102.6 29
Petition for Road Addition 32
Highway Obstructions Interfering with Traffic Maintenance 34
Verification of Compliance with Dept. of Environment & Natural Resources 35
Street and Driveway Access Permit Application 36
Standard Pipe Sizing Chart 38
FIGURE 1: Cross-Section: Shoulder Section 39
FIGURE 2: Cross-Section: Curb and Gutter Section 40
FIGURE 3: Recommended Road Connection 41
FIGURE 4: Recommended Road Connection 42
FIGURE 5: Recommended Road Connection with Curb and Gutter 43
FIGURE 6: Driveway Turnout Grades 44
FIGURE 7: Symmetrical Cul-De-Sac with Curb and Gutter 45
FIGURE 8: Symmetrical Cul-De-Sac with No Curb and Gutter 46
FIGURE 9: Examples of Minor Residential Cul-De-Sac Designs 47
FIGURE 10: Symmetrical Cul-De-Sac with 2’-0” Valley Gutter 48
FIGURE 11: Offset Cul-De-Sac Design 49
FIGURE 12: Detail Section View of Interior Island and Sign 50

DIVISION OF HIGHWAYS

DIVISION	DIVISION ENGINEER	TELEPHONE
1	D.R. Connor, P.E. P.O. Box 850 Edenton, N.C. 27932 E-Mail dconner@mail.dot.state.nc.us	(252) 482-7977 (252) 482-8722 FAX
2	C.E. Lassiter, P.E. P.O. Box 1587 Greenville, N.C. 27835 E-Mail nlassiter@mail.dot.state.nc.us	(252) 830-3490 (252) 830-3352 FAX
3	D.J. Bowers, P.E. 124 Division Drive Wilmington, N.C. 28401 E-Mail dbowers@mail.dot.state.nc.us	(910) 251-5724 (910) 251-5727 FAX
4	D.R. Dupree P.O. Box 3165 Wilson, N.C. 27895 E-Mail don_dupree@mail.dot.state.nc.us	(252) 237-6164 (252) 234-6174 FAX
5	J. G. Nance, P.E. 2612 N. Duke St. Durham, N.C. 27704 E-Mail jnance@dot.state.nc.us	(919) 560-6851 (919) 560-3316 FAX (919) 560-3371 FAX
6	T. R. Gibson, P.E. P.O. Box 1150 Fayetteville, N.C. 28302 E-Mail tgibson@dot.state.nc.us	(910) 486-1493 (910) 486-1959 FAX
7	Mike Mills, P.E. P.O. Box 14996 Greensboro, N.C. 27415-4996 E-Mail mmills@dot.state.nc.us	(336) 334-3192 (336) 334-3637 FAX

8	W.F. Rosser, P.E. P.O. Box 1067 Aberdeen, N.C. 28315 E-Mail Brosser@mail.dot.state.nc.us	(910) 944-2344 (910) 944-5623 FAX
9	D.B. Waters 2135 Cloverdale Avenue Winston-Salem, N.C. 27103 E-Mail Dwaters@mail.dot.state.nc.us	(336) 631-1340 (336) 761-2347 FAX
10	B.G. Payne, P.E. 716 West Main Street Albemarle, N.C. 28001 E-Mail bpayne@mail.dot.state.nc.us	(704) 982-0101 (704) 982-3146 FAX
11	W.E. Hoke, P.E. P.O. Box 250 North Wilkesboro, N.C. 28659 E-Mail whoke@mail.dot.state.nc.us	(336) 667-9111 (336) 667-4549 FAX
12	R.W. Spangler P.O. Box 47 Shelby, N.C. 28151-0047 E-Mail rspangler@dot.state.nc.us	(704) 480-5400 (704) 480-5401 FAX
13	W.D. Smart, P.E. P.O. Box 3279 Asheville, N.C. 28802 E-Mail bsmart@mail.dot.state.nc.us	(828) 251-6171 (828) 251-6394 FAX
14	F.D. Martin, P.E. P.O. Box 37 Sylva, N.C. 28779 E-Mail dmartin@dot.state.nc.us	(828) 586-2141 (828) 586-4043 FAX

DIVISION OF HIGHWAYS

DIVISION	DISTRICT OFFICES	TELEPHONE
1	**District 1**- G. A. Byrum, P.E. P.O. Box 1405 Elizabeth City, N.C. 27909 E-Mail gabyrum@ dot.state.nc.us Counties- Camden, Currituck, Dare, Gates, Pasquotank, Perquimans	(252) 331-4737 (252) 331-4739 FAX
	District 2- R.D. Smith P.O. Box 748 Ahoskie, N.C. 27910 E-Mail ronniesmith@doh.dot.state.nc.us Counties- Bertie, Hertford, Northampton	(252) 332-4021 (252) 332-3040 FAX
	District 3- B.R. Leggett P.O. Box 928 Plymouth, N.C. 27962 E-Mail bleggett@doh.dot.state.nc.us Counties- Chowan, Hyde, Martin, Tyrrell Washington	(252) 793-4568 (252) 793-2211 FAX
2	**District l**- D.R. Taylor, P.E. 1701 West 5th Street Washington, N.C. 27889 E-Mail dannytaylor@doh.dot.state.nc.us Counties- Beaufort, Pitt	(252) 946-3689 (252) 946-7433 FAX
	District 2- A.C. Everett 209 South Glenburnie Road New Bern, N.C. 28560 E-Mail aeverett@doh.dot.state.nc.us Counties- Carteret, Craven, Pamlico	(252) 514-4716 (252) 514-4894 FAX
	District 3- R.E. Davenport, P.E. 1629 HWY 258 S. Kinston, N.C. 28504 E-Mail redavenport@doh.dot.state.nc.us Counties- Greene, Jones, Lenoir	(252) 527-0053 (252) 527-7920 FAX

3 **District 1**- D.R. Huffman (910) 346-2040
410 New Bridge Street (910) 346-8030 FAX
Suite 7-A
Jacksonville, N.C. 28540
E-Mail dhuffman@doh.dot.state.nc.us
Counties- Onslow, Pender

District 2-K.E. Fussell, P.E. (910) 592-6174
220 North Boulevard (910) 592-8209 FAX
Clinton, N.C. 28328
E-Mail kfussell@doh.dot.state.nc.us
Counties- Duplin, Sampson

District 3- D.L. Thomas, P.E. (910) 251-2655
300 Division Drive (910) 251-2661 FAX
Wilmington, N.C. 28401
E-Mail dlthomas@doh.dot.state.nc.us
Counties- Brunswick, New Hanover

4 **District 1**- B.A. Mills (252) 583-5861
P.O. Box 98 (252) 583-1608 FAX
Halifax, N.C. 27839
E-Mail amills@doh.dot.state.nc.us
Counties- Edgecombe, Halifax

District 2- L.R. Ward, P.E. (252) 459-2128
3013 US 64A (252) 459-2401 FAX
Nashville, N.C. 27856
E-Mail lward@mail.dot.state.nc.us
Counties- Nash, Wilson

District 3- R.B. Bunn, III, P.E. (919) 731-7938
2671 US 70 West (919) 731-2017 FAX
Goldsboro, N.C. 27530
E-Mail bbunn@doh.dot.state.nc.us
Counties- Johnston, Wayne

5 **District 1**- T. B. Dover, P.E. (919) 733-2814
4009 District Drive (919) 715-5778 FAX
Raleigh, N.C. 27607
E-Mail tdover@mail.dot.state.nc.us
Counties- Wake

District 2- Vacant (919) 560-6854
815 Stadium Drive (919) 560-3357 FAX
Durham, N.C. 27704
E-Mail
Counties- Durham, Granville, Person

District 3- S.G. Capps, P.E. (919) 492-0111
P.O. Box 205 (252) 492-0123 FAX
Henderson, N.C. 27536
E-Mail scapps@mail.dot.state.nc.us
Counties- Franklin, Vance, Warren

6 **District 1**- R.J. Nelson, P.E. (910) 618-5546
P.O. Box 2157 (910) 618-5586 FAX
Lumberton, N.C. 28359
E-Mail bobnelson@dot.state.nc.us
Counties- Robeson

District 2- R.R. Stone, P.E. (910) 486-1496
P.O. Box 1150 (910) 437-2529 FAX
Fayetteville, N.C. 28302
E-Mail rstone@doh.dot.state.nc.us
Counties- Cumberland, Harnett

District 3- R.E. Crumpler, P.E (910) 642-3760
P.O. Box 27 (910) 642-0494 FAX
Whiteville, N.C. 28472
E-Mail robcrumpler@dot.state.nc.us
Counties- Columbus, Bladen

7 **District 1- Vacant** (336) 570-6833
P.O. Box 766 (336) 570-6873 FAX
Graham, N.C. 27253-0766
E-Mail
Counties- Alamance, Orange

District 2- S.L.Hall (336) 334-3161
P.O. Box 14996 (336) 334-3637 FAX
Greensboro, N.C. 27415-4996
E-Mail lhall@doh.dot.state.nc.us
Counties- Guilford

District 3- John Hunsinger (336) 634-5644
P.O. Box 2513 (336) 634-5656 FAX
Reidsville, N.C. 27323
E-Mail jhunsinger@dot.state.nc.us
Counties- Caswell, Rockingham

8 **District 1**- J.L. Picklesimer, P.E. (336) 629-1423
P.O. Box 1164 (336) 629-7228 FAX
Asheboro, N.C. 27203
E-Mail jpicklesimer@doh.dot.state.mc.us
Counties- Chatham, Randolph

District 2- J.A. Clendenin (910) 944-7621
P.O. Box 1067 (910) 944-5623 FAX
Aberdeen, N.C. 28315
Counties- Lee, Hoke, Moore

District 3- W.T.Campbell,P.E. (910) 582-7075
219 Clemmer Road (910) 582-7065 FAX
Rockingham, N.C. 28379
E-Mail billcampbell@doh.dot.state.nc.us
Counties- Montgomery, Richmond, Scotland

9 **District 1**- C.T. Corriher, P.E. (704) 639-7560
4770 South Main Street (704) 639-7569 FAX
Salisbury, N.C. 28147
E-Mail ccorriher@doh.dot.state.nc.us
Counties- Davidson, Rowan

District 2- M.C. Shaffner (336) 761-2410
2135 Cloverdale Avenue (336) 761-2116 FAX
Winston-Salem, N.C. 27103
E-Mail mshaffner@doh.dot.state.nc.us
Counties- Davie, Forsyth, Stokes

10 **District 1**- J. K. Wilson III, P.E. (704) 982-0104
615 Concord Road (704) 982-9659 FAX
Albemarle, N.C. 28001
Counties- Stanly, Cabarrus

District 2- D.W. Spence, P.E. (704) 596-6900
P.O. Box 190 (704) 598-1758 FAX
Newell, N.C. 28126
E-Mail dspence@doh.dot.state.nc.us
Counties- Mecklenburg

District 3- **Vacant** (704) 289-1397
130 S. Sutherland Ave. (704) 292-1800 FAX
Monroe, N.C. 28112
E-Mail
Counties- Anson, Union

11 **District 1**- M.A.Pettyjohn, P.E. (336) 835-4241
P.O. Box 558 (336) 835-1615 FAX
Elkin, N.C. 28621
E-Mail mpettyjohn@dot.state.nc.us
Counties- Alleghany, Surry, Yadkin

District 2- M.L. Bolick (828) 265-5380
P.O. Box 1460 (828) 265-5414 FAX
Boone, N.C. 28607
E-Mail mbolick@doh.dot.state.nc.us
Counties- Caldwell, Avery, Watauga

District 3- D.J. Tetzlaff (336) 667-9117
P.O. Box 250 (336) 903-9219 FAX
North Wilkesboro, N.C. 28659
E-Mail dtetzlaff@doh.dot.state.nc.us
Counties- Wilkes, Ashe

12 **District 1**- D. D. Reece (704) 480-5402
P.O. Box 47 (704) 480-5438 FAX
Shelby, N.C. 28151-0047
E-Mail dreece@dot.state.nc.us
Counties- Cleveland, Gaston, Lincoln

District 2- J.W. Rand (704) 876-3947
P.O. Box 1107 (704) 876-0602 FAX
Statesville, N.C. 28625
E-Mail jrand@doh.dot.state.nc.us
Counties- Alexander, Catawba, Iredell

13 **District 1**- S.A. Moore, P.E. (828) 652-3344
Route 1, Box 169C (828) 652-8391 FAX
Marion, N.C. 28752
E-Mail tmoore@doh.dot.state.nc.us
Counties- Burke, McDowell, Rutherford
Mitchell

District 2- K.A. Wilson, P.E. (828) 298-2741
P.O. Box 3279 (828) 299-3747 FAX
Asheville, N.C. 28802
E-Mail kwilson@doh.dot.state.nc.us
Counties- Buncombe, Madison, Yancey

14 **District 1**- E.A. Green. P.E. (828) 891-7911
4142 Haywood Road (828) 891-5026 FAX
Horse Shoe, N.C. 28742
E-Mail egreen@doh.dot.state.nc.us
Counties- Transylvania, Henderson, Polk

District 2- C.R. Styles, P.E. (828) 488-2131
P.O. Box 250 (828) 488-3518 FAX
Bryson City, N.C. 28713
E-Mail rstyles@doh.dot.state.nc.us
Counties- Haywood, Jackson, Swain

District 3- J.B. Setzer, P.E. (828) 321-4105
P.O. Box 1551 (828) 321-3228 FAX
Andrews, N.C. 28901
E-Mail jsetzer@doh.dot.state.nc.us
Counties- Cherokee, Clay, Graham, Macon

APPLICATION REQUIREMENTS

Any person or corporation desiring to construct a new subdivision road which is to be dedicated as public, must submit the following information to the District Engineer for proper evaluation in order to obtain a certificate of approval as required by North Carolina General Statute 136-102.6. (See page 29 for Statute).

If the new subdivision road (to be dedicated as public or private) will connect to a state system road, a driveway permit/encroachment agreement authorizing construction on State right-of-way must be obtained from the Division of Highways before beginning any construction. Applications should be made to the District Engineer having jurisdiction in the area.

The appropriate District Engineer's Office can be determined from the listing beginning on Page Four (4) of this manual.

1. Three complete site layouts with vicinity map, including any future expansions anticipated. Additional copies may be required by the District Engineer's Office.

2. Horizontal alignment indicating general curve data on site layout plan.

3. Vertical alignment indicated by percent grade, P.I. station, vertical curve length, and k-value, on site layout plan. Existing ground profile along centerline should also be included.

4. Typical section indicating the pavement design and width of pavement. All slopes shown in accordance with drawings on pages 39 and 40 of this manual.

5. Submission of hydraulics plans and drainage calculations are required. A copy of U.S. Geodetic Survey or other contour mapping showing drainage areas are also required. (NOTE: A sample standard pipe sizing chart is shown on page 38 or any generally accepted industry standard containing the same information as shown in the example may be used.)

6. Four copies of the recorded plat are to be furnished to the District Engineer after certification or upon application for State Maintenance.

7. On new subdivision roads lot lines should not extend beyond the right-of-way. *See North Carolina Transportation and Highway Laws*, chapter 136, article 7, section 136-102.6 for additional information on right-of-way width and lot lines. (See page 29 for statute).

8. When property is subdivided along existing state maintained roads the lot lines may extend beyond the right of way subject to the property owners discretion.

9. A minimum of four separate site plans for driveway permits will be required prior to construction within NCDOT Right of Way. (See pages 36 and 37 for permit).

10. Copy of erosion control plans and permit, approved by Department of Environment and Natural Resources or local government, may be required by the District Engineer. (See page 35).

11. Utility encroachment agreements required prior to addition of road to State System. (For agreement forms, please contact District Engineer.)

SUBDIVISION ROADS

A subdivision road is one that serves a parcel or tract of land that is subdivided into two or more lots, building sites or other divisions for sale or building development for residential purposes where such subdivisions include a new road or change in an existing road.

Subdivision roads shall be designated public or private. Public designations shall be built to minimum construction standards of the North Carolina Department of Transportation as required under North Carolina General Statute 136-102.6. (See page 29 of this manual). Private roads need not meet minimum construction requirements, but must meet minimum construction requirements before ever becoming a part of the State Maintained System.

Definitions

The following definitions shall apply in this manual:

1. Local residential subdivision road - Either cul-de-sacs, loop roads, roads that do not connect thoroughfares or serve major traffic generators.

    A. Dead End Roads - These are roads less than 2,500 feet in length, open at one end only without special provisions for turning around and have no collector characteristics.

    B. Short Connecting Roads - These roads are normally one block long or extend on a block-by-block basis and have no collector characteristics.

    C. Loop Roads - A road that has its beginning and ending points on the same route. It is less than one mile in length and has no collector characteristics.

    D. Other Roads - These roads do not connect thoroughfares or serve major traffic generators and do not have "collector" characteristics.

    E. Cul-De-Sacs - These are very short roads, open at one end only, with a special provision for turning around. They have a "bulb" end design with a specific turning radii and a limited number of lots.

2. Residential collector roads - A road which serves as the connecting street between local residential roads and the thoroughfare system.

A. Dead End Roads - These roads are more than 2,500 feet in length, open at one end only without special provisions for turning around, and have collector characteristics.

B. Connecting Roads - The roads which serve as the connecting road system between other roads within the subdivision and the thoroughfare system.

C. Loop Roads - A road that has its beginning and ending points on the same route. It is more than one mile in length and has collector characteristics.

D. Other Roads - These are other roads having a "collector" type function in the thoroughfare system.

E. Subdivision Access Road - This is a road built through vacant property to provide access to the property being developed. This road would not have lots platted along it.

Requirements for Addition of Subdivision Roads to the System:

1. The minimum construction standards and other requirements in this manual must be a part of the proposal to be reviewed for approval prior to development in order for a plat to be recorded by the County Register of Deeds.

2. A Petition for Addition (DOT Form SR-1) is required from the developer and/or property owners. (See pages 32 and 33 of this manual).

3. Developers or property owners must dedicate right-of-way, as indicated in the minimum design and construction criteria section of this manual, free of charge and clear of all encumbrances.

4. Utility adjustments or relocation to conform to Division of Highways' requirements (See *Policy and Procedures for Accommodating Utility on Highway Rights of Way*) shall be made at no expense to the Division of Highways. Existing and/or relocated utilities may remain within the right-of-way of any subdivision road added to the Secondary Road System provided the location of same meets Division of Highways' approval and further provided the utility owner executes an encroachment agreement on forms furnished by the Division of Highways. As per General Statute 136-102.6, "Utilities are defined as electric power, telephone, television, telegraph, water, sewage, gas, oil, petroleum products, steam, chemicals, drainage, irrigation and similar lines".

G. S. 136-102.6 dictates further that "The right of any utility placed or located on a proposed or existing subdivision public road right-of-way shall be subordinate to the road right-of-way, and the utility shall be subject to regulation by the Board of Transportation". NOTE: The developer and/or owners will be required to submit encroachment agreements for all utilities within a subdivision as dictated by G. S. 136-102.6. (See page 29 for Statute).

5. At least 20 percent of the lots bordering the road must be individually owned.

6. There must be at least two occupied residences for each one-tenth of a mile. A minimum of four occupied homes is required for the addition of roads less than two-tenths of a mile in length. If four occupied homes are not served, it will be treated as a private drive. An exception may be made if the cul-de-sac is fully developed, serves at least four platted lots, and has four occupied homes that abut the road. A minimum of two homes must have primary access to the cul-de-sacs.

7. Subdivision Access Roads must provide ingress and egress for at least five occupied residences for roads less than one mile in length and an average of five occupied residences per mile for roads over one mile in length.

8. The number of platted lots on each road will be reviewed to ensure that the minimum occupied housing requirements in this manual are served.

9. Connecting roads with less than the required occupied homes for the length involved may be reviewed as to traffic usage for addition purposes. Traffic usage equivalent to the traffic that would be generated by the correct number of occupied homes will be acceptable.

10. Any subdivision road with a right-of-way dedicated, recorded, or that has preliminary approval from a county planning board dated after September 30, 1975, will not be added to the State System unless the road is built to the minimum construction standards of the Division of Highways for subdivision roads.

11. Erosion and Sedimentation - All subdivision roads shall have an acceptable permanent vegetative cover established and other acceptable permanent erosion control measures installed in accordance with Division of Highways' specifications, prior to addition to the State maintained system.

12. Subdivision roads shall meet the minimum design and construction criteria contained herein prior to addition to the State system and shall be in an acceptable state of maintenance prior to addition to the State maintained road system.

13. All pipe culverts, storm sewers and appurtenances shall be free of all debris and silt build-up and shall be structurally and hydraulically sound, and functioning in a normal manner. All drainage ditches shall be of such a width and depth and with such a slope as to carry the anticipated discharges. Paved ditches or Rip Rap shall be required where necessary.

14. Where extenuating circumstances exist, the Division Engineer has the authority to allow deviations from this manual which are reasonable, and limited only to safety, environmental and maintenance factors. No deviation will be allowed from the typical section requirements except by written approval from the Chief Engineer-Operations.

15. Within a Municipal Extra Territorial Jurisdiction or within Counties having local ordinances affecting subdivisions, the more restrictive ordinance shall apply.

16. Design concepts using traffic calming devices and walkable community concepts shall be reviewed by the Chief Engineer - Operations.

17. For the Policy on Roadway Bridges and Dams, (see Page 19).

18. Roads being considered for addition that have highway obstructions as defined in NCAC 2E.0404 will not be considered without prior approval of the Division Engineer. (See page 34).

19. The Division of Highways will consider the addition of streets that serve developments with large lots or parcels that are of the size that the occupied housing requirement of two homes per tenth of a mile cannot be met. The number of occupied homes needed shall be a judgment factor based upon the length and the number of lots or parcels involved. The minimum requirement shall be four occupied homes.

UTILITY REQUIREMENTS

1. Poles and other above-ground utilities which are to remain inside the right-of-way under encroachment agreement shall be located at or as near as practical to the right-of-way line. As a minimum above-ground utilities shall be located outside the clear roadside area for the highway section involved.

   Where there are curbed sections, above-ground utilities should be located as far as practical behind sidewalks. There is no single minimum dimension for setback of poles, fire hydrants, etc., behind curbs; however, where there are curbed sections and no sidewalks, 6' will be used as a design safety concept guide.

2. Minimum Depth of Cover for Pipe Lines and Other Utilities

   a. Longitudinal pipe lines and electric power primary .....3'
   b. Longitudinal electric power secondary, and trenched communication lines.....2'
   c. Crossings under roadways .....3'
   d. Crossings under ditches .....2'
   e. Plowed-in communication lines.....18"

3. For residential subdivision streets and residential collector streets; underground utilities may cross under or run longitudinally under the pavement provided future utility stubouts are installed prior to paving. For all other streets and highways, underground utilities may cross under but <u>not</u> run longitudinally under the pavement except in unusual situations approved by the Division Engineer.

4. Acceptable Materials for Pipeline with Utilities Within the Rights of Way - Materials Not Listed Shall Be Referred to the Design Services Unit - Utilities Section.

   a. Smooth Wall Steel Pipe meeting API 5L Grade B Specifications
   b. Spiral Welded Steel Pipe meeting ASTM Specification A-211
   c. Circular Black Steel Pipe meeting ASTM Specification A-120 or A-589
   d. Galvanized Steel Pipe Meeting ASTM A-120 Specifications
   e. Ductile Iron Pipe – class 50 Min. Strength
   f. Concrete Sewer Pipe – Plain and Reinforced Pipe meeting Department of Transportation Standard with Rubber Gasket Joints
   g. Reinforced Concrete Pressure Pipe, Steel Cylinder Type for Water and other Liquids meeting AWWA Specifications C-300, C-301, and C-303
   h. ABS (Acrylonitrile – Butadiene – Styrene) Composite Sewer Pipe shall meet ASTM D-2680 Specifications for Pipe sizes 8" thru 15" and ASTM D-2751 for

pipe sizes 4” and 6” for Laterals. ABS Sewer Pipe shall be used for Domestic Sewage only; also, P.V.C. Truss Pipe Meeting ASTM D-2321 which has to be specified by registered Professional Engineer.

i. P.V.C. (Polyvinyl Chloride) Water Pipe (pressure only) – SDR 14 (C-900), SDR 18 (C-900) and SDR 21.
j. P.V.C. (Polyvinyl Chloride) Sewer Pipe (Force Main) SDR 14 (C-900), SDR 18 (C-900) and SDR 21.
k. P.V.C. (Polyvinyl Chloride) pipe (Gravity Sewer) SDR 14 (C-900), SDR 18 (C-900), SDR 21, SDR 26, SDR 35, ASTM F 794, ASTM F 949 (A-2000) and Schedule 40 and 80.
l. V.C. (Vitrified Clay) Sewer Pipe, Extra Strength meeting ASTM Specifications C-700 with Factory Fabricated Joints meeting ASTM Specifications C-425.
m. P.E. (Polyethylene) Plastic Pipe – SDR 7 meeting ASTM Specifications D-2239 and Plastic Tubing – SDR 9 meeting ASTM Specification D-2737 for sizes ¾” thru 2” only.
n. Polyethylene Plastic Pipe (High Molecular Weight) and (Medium Molecular Weight) SDR 11 meeting Plastic Pipe Institute Material Designation PE 3408 and PE 2406 in sizes up to 6.625” O.D. for gas with maximum operating pressure of 60 PSIG.
o. Type K copper Pipe meeting ASTM Specification B-88 for sizes ¾” thru 2”.

5. Any utility to be installed within the right-of-way of a state maintained road will require an encroachment agreement with the North Carolina Board of Transportation in accordance with their publication entitled *Policies and Procedures for Accommodating Utilities on Highway Rights of Way*.

6. All non ferrous pipe lines shall be installed with a locating tape.

7. All utility structures (i.e. vaults, manholes, and boxes) shall be load rated for the appropriate dead load plus an HS 20 live load. Such structures shall be designed and certified by a licensed professional engineer.

8. Electrical power and communication facilities should conform to the currently applicable National Electrical Safety Code except vertical clearances shall be no less than 18 feet in any case.

MINIMUM DESIGN AND CONSTRUCTION CRITERIA FOR SUBDIVISION ROADS

CONSTRUCTION REQUIREMENTS

A. DRAINAGE

The Division of Highways shall review all drainage prior to acceptance of any facility to the State System. Drainage, utility, or public easements, are not considered a portion of the highway facility.

All storm drainage shall be adequate so that the road may be maintained without excessive cost, and not cause flooding on private property from storm runoff of the design frequency. Permanent drainage easements may be established by the designer; however, the NCDOT does not accept maintenance responsibility for the easement outside of the roadway right-of-way. The minimum design frequency shall be as follows but may be increased at the recommendation of the State Hydraulics Engineer.

1. Storm sewer collector - 10 years
2. Cross drainage for Secondary Routes - 25 years
3. Cross drainage on primary and N.C. routes will be 50 years.
4. Minimum Cross Pipe diameter is 18”, Minimum Driveway Pipes diameter is 15”.
5. All drainage shall be consistent with criteria found in *NCDOT - Guidelines for Drainage Studies and Hydraulic Design*. (Contact Special Services Section (919) 250-4128)

In areas where ditch grades or quantities of flow deem it impracticable to establish and maintain vegetation, an erosive resistant lining such as paving, matting or rip rap may be required.

Subsurface drainage shall be adequate to maintain a stable subgrade.

When road crossings are within areas designated as flood hazard areas under the Federal Flood Insurance Program, the design must be approved by the responsible local governing agency for its consistency with local flood zoning ordinances. Retention/detention basin shall be located outside the right-of-way and shown on plans where possible. The DOT assumes no responsibility for maintenance nor liability of the basins.

B. BRIDGES AND DAMS

Bridges

Minimum criteria for bridges to be built by private interest for future acceptance by the Division of Highways.

1. Structures which are to span streams shall be designed for hydraulic requirements in accordance with Division of Highways criteria, and plans shall be submitted to the Hydraulics Unit for review and approval.

   Rip Rap will be required as recommended by the Hydraulics Unit.

2. Structures shall be designed for minimum live load of HS-20 as specified in the Standard Specifications for *Highway and Bridges of the American Association of State Highway and Transportation Officials*, and plans shall be submitted for review and approval by the Structure Design Unit.

3. Bridge deck widths and clearances shall be in accordance with the North Carolina Department of Transportation "Bridge Policy." For bridges with curb and gutter approaches, the clear bridge width shall be the same as the curb to curb approach width except where bikeways or sidewalks are carried across the structure. Curb and gutter will be transitioned out in 50 feet to line up the face of curb and bridge rail. For shoulder section roadways, the bridge width should be a minimum of 24'.

4. The following materials are acceptable for bridge construction:

   a. For substructures - reinforced concrete, structural steel, pre-stressed concrete, or steel piles or combination of these materials.

   b. For superstructures - pre-stressed concrete, reinforced concrete deck slab structural steel I-beams with reinforced concrete deck or corrugated metal deck with asphaltic wearing surface.

   c. The type and design of bridge rails shall be as approved by the Structure Design Unit of the Division of Highways.

5. Guardrail shall be installed at the bridge approaches where required.

6. All material and workmanship used in construction of the structure shall be in accordance with *North Carolina Standard Specifications for Roads and Structures*.

Roadway Dams

1. It is the policy of the Division of Highways to discourage the location of roadways on dams. In those cases, where a definite advantage may be gained or a substantial savings in funds may be realized, the utilization of a dam for a roadway may be favorably considered.

2. Where it is determined that a dam will be utilized as a roadway, the following criteria must be met:

   A. When applicable, the dam must have certification from the N. C. Department of Natural Resources and Community Development pursuant to the "Dam Safety Law of 1967", (As amended by the General Assembly of 1977).

   B. All pertinent data regarding the design of the embankment as an impoundment structure must be presented to the Division of Highways for review.

   C. The top cross section dimension must be the roadway width required (from shoulder point to shoulder point) for the facility plus a minimum of 4 feet.

   D. Guardrail will be provided on the impoundment side of the roadway. For safety the District Engineer may require guardrail on both sides of the roadway.

   E. Spillway will be designed to provide 2 feet of freeboard at the shoulder for an estimated 50-year design frequency outflow as a minimum.

   F. A means of draining the lake completely will be provided.

3. Design acceptance or approval by the Division of Highways is limited to the use of the dam as a roadway and is in no way intended as approval of the embankment as an impoundment structure.

4. Responsibility incurred by the Division of Highways when a section of roadway crossing a dam is accepted as a part of the state maintenance system is limited to maintenance of the roadway for highway purposes from shoulder point to shoulder point only. Responsibility for the impoundment, any damage that may result therefrom, and maintenance of the dam or appurtenances as may be required to preserve its integrity as a water impoundment structure, shall remain with the owner of the impoundment. Any such maintenance work will be subject to the provisions of G.S. 136-93.

5. Impoundment of water on highway right-of-way may be allowed under the following criteria:

   A. The impoundment does not adversely affect the right-of-way for highway purpose.

   B. Adjustment, as required, flattening slopes, installing rip rap, and any others, shall be the responsibility of the developer.

6. Structures under, over and/or on Dams shall be designed and plans prepared under the supervision of a Licensed Professional Engineer.

C. CURB AND GUTTER AND SIDEWALK

All curb and gutter and sidewalk sections shall meet Division of Highways standards.

1. The standard 2’-6" concrete curb and gutter is the preferred type to be used.

2. The Concrete Valley Gutter is an allowable type.

3. Any other types of curb and gutter shall be subject to the approval of the District Engineer.

4. Curb inlet spacing and storm system design shall be consistent with criteria found in *NCDOT - Guidelines for Drainage Studies and Hydraulic Design.* (Contact Special Services Section (919) 250-4128)

5. NCDOT will allow sidewalks by encroachment and will not accept responsibility for maintenance. All sidewalks shall meet requirements of the “Americans With Disabilities Act”.

D. WHEEL CHAIR RAMPS

In accordance with General Statute 136-44.14, all street curbs in North Carolina being constructed or reconstructed for maintenance procedures, traffic operations, repairs, correction of utilities or altered for any reason after September 1, 1973, shall provide wheel chair ramps for the physically handicapped at all intersections where curb and gutter is provided and at other major points of pedestrian flow.

Wheel chair ramps and depressed curbs shall be constructed in accordance with details contained in the Department of Transportation, Division of Highways' publication entitled, *Guidelines, Curb Cuts and Ramps for Handicapped Persons.*

E. PAVEMENT DESIGNS

Shown below are minimum thicknesses of base and surface course to be used. Design should be chosen from Group I or Group II depending on subgrade soil type. The District Engineer may require a subgrade soil test to determine the soil classification type. Heavier pavement designs may be required based on traffic, truck volumes, etc.

GROUP I

Good to Excellent Subgrade Soil Types	Base Course	Pavement Surface
A-1-a, A-l-b, A-3	7" STBC, Type A or C	2” I-1 or I-2
A-2-4, A-2-5, A-2-6, A-2-7	9" STBC, Type A or C	1 ½” I-1 or I-2
	8" ABC or STBC, Type B	AST, 1” SA or I-1 or I-2
	6" ABC or STBC, Type B	1 ½” I-1 or I-2
	3" ACBC, Type HB	1 ½” I-1 or I-2
	3 1/2" ACBC, Type HB	1" SA or I-1 or I-2
	4" ACBC	5" Jointed Concrete

GROUP II

Poor to Fair
Subgrade Soil Types

A4, A-5, A-6, A-7-5 A-7-6	9" STBC, Type A or C .....2” I-1 or I-2
	8" ABC or STBC, Type B.....1 ½” I-1 or I-2
	10" ABC or STBC, Type B.....AST, 1" SA or I-1 or I-2
	4" ACBC, Type HB.....1 ½” I-1 or I-2
	3" ACBC, Type HB.....2" I-1 or I-2
	4" ABC.....6" Jointed Concrete

Any other pavement design must be reviewed by the Division Engineer on an individual basis and approval will be based upon sound engineering principles. Decorative pavers may be permitted by encroachment. Maintenance of decorative pavers will not be performed by NCDOT.

NOTE:

Subgrade No base course shall be placed on muck, pipe clay, organic matter or other unsuitable material.

ABC	Aggregate Base Course, No. 7 stone
STBC	Soil Type Base Course
AST	Asphalt Surface Treatment
SA	Asphalt Concrete Surface Course, Type F-1 (Sand Asphalt)
I-2	Asphalt Concrete Surface Course, Type I-2
I-1	Asphalt Concrete Surface Course, Type I-1
ACBC	Asphalt Concrete Base Course, Type HB (Black Base)

Other base courses such as various cement-treated materials may be used in lieu of those shown above. These materials shall be of sufficient thickness to provide equivalent strength. However, any design other than those shown above must also be approved prior to use by the Division Engineer.

All materials shall meet the requirements set forth in the latest edition of the *North Carolina Standard Specifications for Roads and Structures*.

F. TRAFFIC CONTROL

The construction of all subdivision road intersections including those with existing state maintained roadways shall be constructed using traffic control standards as designated in the "*Manuals on Uniform Traffic Control Devices*", "*North Carolina Supplement to the Manual on Uniform Traffic Control Device*s", and the "North Carolina Highway Design Branch Roadway Standard Drawings," prior to formal addition to the system. See G.S. 136-30.

G. GUARDRAIL

The placement of guardrail may be required by the Division of Highways prior to Formal Addition to the System, in the event the terrain adjacent to the roadway is felt to warrant guardrail from a safety standpoint.

H. ROAD INTERSECTIONS (See Figures 3 and 4 on pages 41 and 42).

1. The most desirable intersections are those with angles of 75 to 90 degrees. Intersections with angles from 60 to 75 degrees are acceptable under extreme conditions.

2. Minimum sight triangle for stop condition when connecting new local residential roads or residential collector roads to existing state maintained roads is 70 feet along the existing road right of way and 10 feet along the new road right of way.

3. All internal intersections shall have minimum 25' radii.

4. Unusual designs such as "Bubble Type" configurations to allow for more lots, will not be allowed.

I. ISLANDS OR SHORT MEDIANS AT SUBDIVISION ENTRANCES

The Division of Highways will review requests for the allowance of islands or short medians desired for aesthetics on State Highway System Secondary Roads at the entrance to a subdivision. Approval will be with the following understanding:

1. The Division of Highways will not maintain the island or the median section.
2. The island or the median section will be removed if not properly maintained by someone involved with the subdivision, i.e. developer, homeowners, etc.

3. The District Engineer may allow the island or median sections after review on an individual basis. This shall include all plantings.

4. The minimum lane width at the entrances, excluding curb and gutter will be 14 feet. (See page 50 for detail).

J. SUBDIVISION NAME MARKERS

The Division of Highways will review requests to erect subdivision name markers on an individual basis. The name markers may be allowed to be located within the State Highway System Secondary Road rights-of-way at the beginning of a subdivision road provided the location of such is outside the line of sight and the normal maintenance limits. The name markers may be approved only at locations which will not sacrifice safety to the general traveling public. Approval to erect subdivision name markers will be with the following understanding: (See page 50 for typical dimensions associated with marker installation.)

1. All costs will be the responsibility of the requester.

2. The Division of Highways will not maintain the marker or the area around the marker.

3. The markers may be removed if not properly maintained.

4. The Division Engineer may allow the subdivision name markers on secondary road rights-of-way after review on an individual basis.

5. If non-breakaway design, a 30 foot recommended recovery area is desirable.

K. MINIMUM DESIGN CRITERIA

1. Local Residential Subdivision Roads include:
   a. Cul-De-Sacs
   b. Dead End Roads - Less than 2500 feet in length
   c. Short connecting Roads - One block long or that extend on a block by block basis
   d. Loop Roads - Less than 1 mile in length
   e. Other roads that do not connect thoroughfares or serve major traffic generators. These roads do not have "collector" characteristics.

TERRAIN CLASSIFICATION	LEVEL	ROLLING	HILLY
Terrain Classification Definition			
Level - Cross slope range of 0% to 8%			
Rolling - Cross slope range of 8.1% to 15%			
Hilly - Cross slope over 15%			
Right of Way Width			
Curb and Gutter Section	40’	40’	40’
Shoulder Section	45’	45’	45’
Pavement Width			
Curb and Gutter Section	*26’ G-G	*26’ G-G	*26' G-G
Shoulder Section	18'	18'	18'
G-G refers to face to face of standard curb and gutter section, bottom of the “V” to the bottom of the “V” for the valley types section. Other types will be reviewed by the District Engineer with the GG limits applicable			
Minimum Shoulder Width			
Shoulder Section	6'	4' to 6'	4' to 6'
Shoulder width between 4' to 6' shall be approved by the District Engineer considering adjacent land characteristics			
Maximum Cut and Fill Slopes	2:1	2:1	1 1/2:l
Design Speed	30 mph	25 mph	20 mph
Minimum Sight Distance on Vertical Curves	200'	150'	110'
Minimum Centerline Radius	230'	150'	90'
Minimum Superelevation Rate for Minimum Radius	. 06 ft/ft	.04 ft/ft	.02 ft/ft
Maximum Grade	9%	12%	18%
Grades for 100' each way from intersection exceeding 5 percent may be reviewed by District Engineer for consideration. Grades less than 0.5 percent should not be used unless reviewed individually by the District Engineer to determine potential maintenance problems.			
K = Rate of Vertical Curvature for Minimum Sight Distance.			
CREST	30	20	10
SAG	30	20	10
STOP	14	9	5
Formula for determination of length of vertical curve required to provide minimum site distance.			
[L = KA]			
L = Length of vertical curve in feet			
K = Rate of vertical curvature in feet per percent of A			
A = Algebraic difference in grades in percent			
Minimum Cul-De-Sac Radius			
Right of Way			
Curb and Gutter Section	45'	45'	45'
Shoulder Section	50'	50'	50'
Minimum Cul -De-Sac Radius			
Curb and Gutter Section	37' to G	37' to G	37'to G
Shoulder Section * (See page 28)	35'	35'	35'

2. Residential Collector Roads include:

a. Dead End Roads - More than 2500 feet in length
b. Connecting roads between the local residential subdivision roads and the thoroughfare system
c. Loop Roads - More than one (1) mile in length
d. Other roads having a "collector" type function in the thoroughfare system

TERRAIN CLASSIFICATION	LEVEL	ROLLING	HILLY
Terrain Classification Definition			
Level - Cross slope range of 0% to 8%			
Rolling - Cross Slope range of 8.1% to 15%			
Hilly - Cross slope over 15%			
Right of Way Width			
Curb and Gutter Section	50’	50’	50’
Shoulder Section	50’	50’	50’
Pavement Width			
Curb and Gutter Section	34’ G-G	34’ G-G	34’ G-G
Shoulder Section	20’	20’	20’
G-G refers to face to face of standard curb and gutter section, bottom of the “V” to the bottom of the “V” for the valley types section. Other types will be reviewed by the Division Engineer with the G-G limits applicable.			
Minimum Shoulder Width			
Shoulder Section	6'	6'	6'
Maximum Cut and Fill Slopes	2:1	2:1	1 1/2:1
Design Speed	35 mph	30 mph	25 mph
Minimum Sight Distance on Vertical Curves	250'	200'	150'
Minimum Centerline Radius	310'	230'	150'
Minimum Superelevation Rate for Minimum Radius	.08 ft/ft	.06 ft/ft	.04 ft/ft
Maximum Grade	6%	9%	12%

Grades for 100' each way from intersection exceeding 5 percent (%) may be reviewed by District Engineers for consideration. Grades less than 0.5 percent should not be used unless reviewed individually by the District Engineer to determine potential maintenance problems.

K = Rate of Vertical Curvature for minimum sight distance

CREST	45	30	20
SAG	45	30	20
STOP	20	14	9

Formula for determination of length of vertical curve required to provide minimum sight distance.

[L = KA]
L = Length of vertical curve in feet
K = Rate of vertical curvature in feet per percent of A
A = Algebraic difference in grades in percent

3. Thoroughfare Plan Roads

For subdivision developments resulting in the construction of a thoroughfare plan route by the developer, the subdivision plan will be forwarded through the District Engineer, to the Traffic Engineering Branch for review by appropriate personnel of the Division of Highways in Raleigh, North Carolina.

4. Industrial Access or Commercial Complex Roads

The minimum construction standards for industrial access road requests or for commercial centers and apartment complexes will be reviewed individually. The construction standards for pavement design will be in line with expected usage. Final pavement design will be approved by the District Engineer.

*NOTE: On cul-de-sacs, a maximum of two-tenths of a mile in length, 18 feet of pavement will be allowed (not including gutter). (See pages 40, 45 and 48).

Cul-de-sac designs other than the "Bulb" End Design will be subject to the approval of the Division Engineer after review on an individual basis. See Page 47 for several examples of minor residential cul-de-sac designs.

**NOTE: The minimum superelevation rates shown for the varying design speeds are for the minimum radii shown. For radii different from these, use the appropriate table from the 1994 Edition of AASHTO's *Policy on Geometric Design of Highways and Streets* for a desirable design. For a minimum design, the superelevation rate can be calculated from the simplified curve formula:

$$e = \left(\frac{V^2}{15R}\right) - f$$

where

e = superelevation rate in foot per foot
V = design speed in miles per hour
R = Radius of curve in feet
f = side friction factor (See page 143 of the 1994 *Policy on Geometric Design of Highways and Streets*)

Short cul-de-sacs and dead end streets 1500 feet or less in length may be accepted without superelevation.

§136-102.6. Compliance of subdivision streets with minimum standards of the Board of Transportation required of developers

(a) The owner of a tract or parcel of land which is subdivided from and after October 1, 1975, into two or more lots, building sites, or other divisions for sale or building development for residential purposes, where such subdivision includes a new street or the changing of an existing street, shall record a map or plat of the subdivision with the Register of Deeds of the county in which the land is located. The map or plat shall be recorded prior to any conveyance of a portion of said land, by reference to said map or plat.

(b) The right-of-way of any new street or change in an existing street shall be delineated upon the map or plat with particularity and such streets shall be designated to be either public or private. Any street designated on the plat or map as public shall be conclusively presumed to be an offer of dedication to the public of such street.

(c) The right-of-way and design of streets designated as public shall be in accordance with the minimum right-of-way and construction standards established by the Board of Transportation for acceptance on the State highway system. If a municipal or county subdivision control ordinance is in effect in the area proposed for subdivision, the map or plat required by this section shall not be recorded by the Register of Deeds until after it has received final plat approval by the municipality or county, and until after it has received a certificate of approval by the Division of Highways as herein provided as to those streets regulated in subsection (g). The certificate of approval may be issued by a District Engineer of the Division of Highways of the Department of Transportation.

(d) The right-of-way and construction plans for such public streets in residential subdivisions, including plans for street drainage, shall be submitted to the Division of Highways for review and approval, prior to the recording of the subdivision plat in the office of the Register of Deeds. The plat or map required by this section shall not be recorded by the Register of Deeds without a certificate of approval by the Division of Highways of the plans for the public street as being in accordance with the minimum standards of the Board of Transportation for acceptance of the subdivision street on the State highway system for maintenance. The certificate of approval shall not be deemed an acceptance of the dedication of such streets on the subdivision plat or map. Final acceptance by the Division of Highways of such public streets and placing them on the State highway system for maintenance shall be conclusive proof that the streets have been constructed according to the minimum standards of the Board of Transportation.

(e) No person or firm shall place or erect any utility in, over, or upon the existing or proposed right-of-way of any street in a subdivision to which this section applies, except in accordance with the Division of Highway's policies and procedures for accommodating utilities on highway rights-of-way, until the Division of Highways has given written approval of the location of such utilities. Written approval may be in the form of exchange of correspondence until such times as it is requested to add the street or streets to the State system, at which time an encroachment agreement furnished by the Division of Highways must be executed between the owner of the utility and the Division of Highways.

§136-102.6 continued

The right of any utility placed or located on a proposed or existing subdivision public street right-of-way shall be subordinate to the street right-of-way, and the utility shall be subject to regulation by the Department of Transportation. Utilities are defined as electric power, telephone, television, telegraph, water, sewage, gas, oil, petroleum products, steam, chemicals, drainage, irrigation, and similar lines. Any utility installed in a subdivision street not in accordance with the Division of Highways, accommodation policy, and without prior approval by the Division of Highways, shall be removed or relocated at no expense to the Division of Highways.

(f) Prior to entering any agreement or any conveyance with any prospective buyer, the developer and seller shall prepare and sign, and the buyer of the subject real estate shall receive and sign an acknowledgment of receipt of a separate instrument known as the subdivision streets disclosure statement (hereinafter referred to as disclosure statement.) Said disclosure statement shall fully and completely disclose the status (whether public or private) of the street upon which the house or lot fronts. If the street is designated by the developer and seller as a public street, the developer and seller shall certify that the right-of-way and design of the street has been approved by the Division of Highways, and that the street has been or will be constructed by the developer and seller in accordance with the standards for subdivision streets adopted by the Board of Transportation for acceptance on the highway system. If the street is designated by the developer and seller as a private street, the developer and seller shall include in the disclosure statement an explanation of the consequences and responsibility as to maintenance of a private street, and shall fully and accurately disclose the party or parties upon whom responsibility for construction and maintenance of such street or streets shall rest, and shall further disclose that the street or streets will not be constructed to minimum standards, sufficient to allow their inclusion on the State highway system for maintenance. The disclosure statement shall contain a duplicate original which shall be given to the buyer. Written acknowledgment of receipt of the disclosure statement by the buyer shall be conclusive proof of the delivery thereof.

(g) The provisions of this section shall apply to all subdivisions located outside municipal corporate limits. As to subdivisions inside municipalities, this section shall apply to all proposed streets or changes in existing streets on the State highway system as shown on the comprehensive plan for the future development of the street system made pursuant to G.S. 136-66.2, and in effect at the date of approval of the map or plat.

(h) The provisions of this section shall not apply to any subdivision that consists only of lots located on Lakes Hickory, Norman, Mountain Island and Wylie which are lakes formed by the Catawba River which lots are leased upon October 1, 1975. No roads in any such subdivision shall be added to the State maintained road system without first having been brought up to standards established by the Board of Transportation for inclusion of roads in the system, without expense to the State. Prior to entering any agreement or any conveyance with any prospective buyer of a lot in any such subdivision, the seller shall prepare and sign, and the buyer shall receive and sign an acknowledgment of receipt of a statement fully and completely disclosing the status of and the responsibility for construction and maintenance of the road upon which such lot is located.

§136-102.6 continued

(i) The purpose of this section is to insure that new subdivision streets described herein to be dedicated to the public will comply with the State standards for placing subdivision streets on the State highway system for maintenance, or that full and accurate disclosure of the responsibility for construction and maintenance of private streets be made. This section shall be construed and applied in a manner which shall not inhibit the ability of public utilities to satisfy service requirements of subdivisions to which this section applies.

(j) The Division of Highways and District Engineers of the Division of Highways of the Department of Transportation shall issue a certificate of approval for any subdivision affected by a roadway corridor official map established by the Board of Transportation only if the subdivision conforms to Article 2E of this Chapter or conforms to any variance issued in accordance with that Article.

(k) A willful violation of any of the provisions of this section shall be a Class I misdemeanor.

NORTH CAROLINA DEPARTMENT OF TRANSPORTATION
PETITION FOR ROAD ADDITION
FORM SR-1 REVISED 1-99

ROADWAY INFORMATION: (Please Print)

County: _____ Road Name: _____
(Please list additional street names and lengths on the back of this form.)

Subdivision Name: _____ Length (miles): _____

Number of occupied homes having street frontage: _____

Location: _____miles N S E W of the intersection of Route _____ and Route _____
(Circle one) (SR, NC or US) (SR, NC or US)

We, the undersigned, being property owners and/or developer of _____in

_____County, do hereby request the Division of Highways to add the above described road.

CONTACT PERSON: Name and Address of First Petitioner. (Please Print)

Name: _____ Phone Number: _____

Street Address: _____

Mailing Address: _____

PROPERTY OWNERS

NAME	MAILING ADDRESS	TELEPHONE

Form SR-1

INSTRUCTIONS FOR COMPLETING PETITION:

1. Complete Information Section
2. Identify Contact Person (This person serves as spokesperson for petitioner(s)).
3. Attach four (4) copies of recorded subdivision plat or property deeds, which refer to candidate road.
4. Adjoining property owners and/or the developer may submit a petition. Subdivision roads with prior NCDOT review and approval only require the developer's signature.
5. If submitted by the developer, encroachment agreements from all utilities located within the right of way shall be submitted with the petition for Road addition. However, construction plans may not be required at this time.
6. Submit to District Engineer's Office.

FOR NCDOT USE ONLY: Please check the appropriate block

❑Rural Road ❑Subdivision established prior to October 1, 1975 ❑Subdivision established after October 1, 1975

REQUIREMENTS FOR ADDITION

If this road meets the requirements necessary for addition, we agree to grant the Department of Transportation a right-of-way of the necessary width to construct the road to the minimum construction standards of the NCDOT. This right-or-way will extend the entire length of the road that is requested to be added to the state maintained system and will include the necessary areas outside of the right-of-way for cut and fill slopes and drainage. Also, we agree to dedicate additional right-of-way at intersections for sight distance and design purposes and to execute said right-of-way agreement forms that will be submitted to us by representatives of the NCDOT. The right-of-way shall be cleared at no expense to the NCDOT, which includes the removal of utilities, fences, other obstructions, etc.

General Statute 136-102.6 (see page 29 for Statute) states that any subdivision recorded on or after October 1, 1975, must be built in accordance with NCDOT standards in order to be eligible for addition to the State Road System.

ROAD NAME	LENGTH	ROAD NAME	LENGTH

NORTH CAROLINA ADMINISTRATIVE CODE

HIGHWAY OBSTRUCTIONS INTERFERING

WITH TRAFFIC MAINTENANCE

19A NCAC 2E.0404

Highway obstructions include driveway headwalls, fences, rural mailboxes, newspaper delivery boxes and other roadside obstructions interfering with traffic or maintenance.

(1) It shall be unlawful to place any highway obstruction, including a driveway headwall, fence, rural mailbox, newspaper delivery box or other roadside obstruction, so as to interfere with the traffic or maintenance of the roads and highways of the state highway system.

(2) If the department determines, that any highway obstruction, including a driveway headwall, fence, rural mailbox, newspaper delivery box, its supports or other roadside obstruction, constitutes an unreasonable roadside collision hazard, the highway obstruction shall be removed by the person responsible for placing the obstruction within the right-of-way within 30 days of receipt of a written notice from the department to the person responsible for placing the obstruction within the right-of-way.

(3) Only mailboxes or newspaper delivery boxes with non-rigid type posts, such as a 4” x 4” wooden or a small diameter metal type, are permitted on road additions made to the state highway system after May 3, 1990. The location within the right of way of an addition to the system of any brick columns, mailboxes or newspaper delivery boxes on rigid stands such as block, stone or any other , type determined to be a traffic hazard is prohibited.

(4) The failure of the person responsible for placing the unlawful obstruction within the right of way, to remove the obstruction within 30 days after written notice by the Department of Transportation shall constitute a misdemeanor. Failure to remove or make safe any mailbox or newspaper delivery its supports or any other obstruction within the specified 30 days of this Rule shall be cause for the Department’s Division Engineer to take action to remove the unacceptable mailbox or newspaper delivery box, its supports or other obstruction installation and also bill the responsible party for the expense of removal if appropriate.(See page 15, No.18)

VERIFICATION OF COMPLIANCE WITH

DEPARTMENT OF ENVIRONMENT AND NATURAL RESOURCES (DENR)

(Check Appropriate Box)

☐ The required permits from the Department of Environment and Natural Resources is not required for this project; however, the current EPA guidelines will be followed during our construction operations.

☐ The required permits from the Department of Environment and Natural Resources has been filed for this project and a copy of the Approval is attached.

☐ The required permits from the Department of Environment and Natural Resources has been filed for this project and a copy of the Approval will be forwarded to the North Carolina Department of Transportation upon receipt.

Project Name:_____

Township:_____ County:_____

Project Engineer:_____ Phone No.:_____

Project Contact:_____ Phone No.:_____

Applicants Name:_____

Date Submitted :_____

(Reference Page 11, Item 10)

LOCATION OF PROPERTY:

County _____ Access to Route No. _____

Exact Distance _____ ☐ Miles ☐ Feet ☐ ☐ N S E W ☐ ☐

N.C. DEPARTMENT OF TRANSPORTATION

STREET AND DRIVEWAY ACCESS PERMIT APPLICATION

From the Intersection of Route No. _____ and Route No. _____ Toward _____

PROPERTY WILL BE USED FOR: ☐ Special Commercial ☐ Regular Commercial ☐ Residential /Subdivision ☐ Other

PROPERTY ☐ is ☐ is not within _____City Zoning Area.

PROPERTY IS LOCATED IN: ☐ Rural ☐ Urban Development Classification

AGREEMENT

I, the undersigned property owner, request access and permission to construct driveway(s) or street(s) on public right-of-way at the above location.

I agree to construct and maintain driveway(s) or street entrance(s) in absolute conformance with the curr ent "Policy on Street and Driveway Access to North Carolina Highways" as adopted by the North Carolina Department of Transportation.

I agree that no signs or objects will be placed on or over the public right-of-way.

I agree that the driveway(s) or street(s) will be constructed as shown on the sketch on (the reverse side) (the attached plans).

I agree that that driveway(s) or street(s) as used in this agreement include any approach tapers, storage lanes or speed change lanes as deemed necessary.

I agree that if any future improvements to the roadway become necessary, the portion of driveway(s) or street(s) located on public right-of-way will be considered the property of the North Carolina Department of Transportation, and I will not be entitled to reimbursement or have any claim for present expenditures for driveway or street construction.

I agree that this permit becomes void if construction of driveway(s) or street(s) is not completed within the time specified by the "Policy on Street and Driveway Access to North Carolina Highways".

I agree to pay an installation fee for pipe installed by the Division of Highways or pay a $50 inspection fee for installation by others. Make checks payable to NCDOT. The inspection fee will be reimbursed if application is denied.

I agree to construct and maintain the driveway(s) or street(s) in a safe manner so as not to interfere with or endanger the public travel.

I agree to provide during construction proper signs, signal lights, flagers and other warning devices for the protection of traffic in conformance with the current "Manual on Uniform Traffic Control Devices for Streets and Highways" and Amendments or Supplements thereto. Information as to the above rules and regulations may be obtained for the Division Engineer.

I agree to indemnify and save harmless the North Carolina Department of Transportation from all damages and claims for damage that may arise by reason of this construction.

I agree that the North Carolina Department of Transportation will assume no responsibility for any damages that may be caused to such facilities, within the highway right-of-way limits, in carrying out its construction.

I agree to provide a Performance Bond in the amount specified by the Division of Highways for any construction proposed on the State Highway system.

I AGREE TO NOTIFY THE DISTRICT ENGINEER WHEN THE PROPOSED WORK BEGINS AND WHEN IT IS COMPLETED.

INSTALLATION BY: ☐ NCDOT ☐ OTHERS

Entrance Width(s)	Pipe Size	Pipe Length	Pipe installation Costs	Inspection Satisfactory (Yes/No)
1.			$	
2.			$	
3.			$	

AMOUNT RECEIVED _____ Dollars $

_____ , _____

SIGNATURE (TITLE) DATE

INSPECTION BY NCDOT

_____ ,

SIGNATURE (TITLE) DATE

PROPERTY OWNER		WITNESS	
NAME	_____	NAME	_____
SIGNATURE	_____	SIGNATURE	_____
ADDRESS	_____	ADDRESS	_____
	_____ Phone No. _____		_____

APPLICANT		WITNESS	
NAME	_____	NAME	_____
SIGNATURE	_____	SIGNATURE	_____
ADDRESS	_____	ADDRESS	_____
	_____ Phone No. _____		_____

APPROVALS

APPROVAL BY: Local Governmental Authority (when required)

SIGNATURE	TITLE	DATE

APPLICATION RECEIVED BY DISTRICT ENGINEER		APPLICATION APPROVED BY DISTRICT ENGINEER	
SIGNATURE	**DATE**	**SIGNATURE**	**DATE**

COMMENTS:

SHOW:

1. LOCATION OF DRIVEWAYS
2. DETAILS OF WORK, INCLUDING PIPES
3. EXISTING BUILDING, WALL, ETC. OR DRIVEWAYS
4. PROPOSED BUILDING, WALL, ETC.
5. HIGHWAY FEATURES

PROPOSED PLANS

DRAW OR SKETCH BELOW, OR ATTACH CONSTRUCTION PLANS FOR STREETS

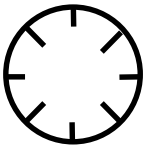

INDICATE NORTH

DRAINAGE DATA

LOCATION		ROADWAY (C & G only)		RUNOFF					PIPE DESIGN							
INLET NUMBER	ROADNAME / STATION	GUTTER GRADE	PAVEMENT CROSS-SLOPE	INLET DRAINAGE AREA	INLET DISCHARGE	TOTAL DRAINAGE AREA	TOTAL DISCHARGE	FREQUENCY	ELEVATION INLET	ELEVATION OUTLET	SLOPE	PIPE DIAMETER & TYPE	CAPACITY	HW / D	OVERTOPPING ELEVATION	Remarks

Any Industry Standard form may be submitted

(Reference Page 10, No. 5)

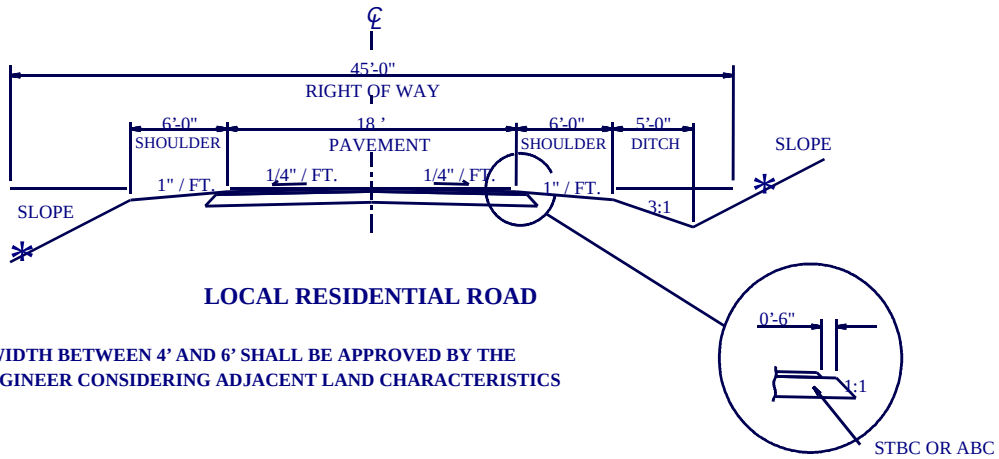

LOCAL RESIDENTIAL ROAD

SHOULDER WIDTH BETWEEN 4' AND 6' SHALL BE APPROVED BY THE DISTRICT ENGINEER CONSIDERING ADJACENT LAND CHARACTERISTICS

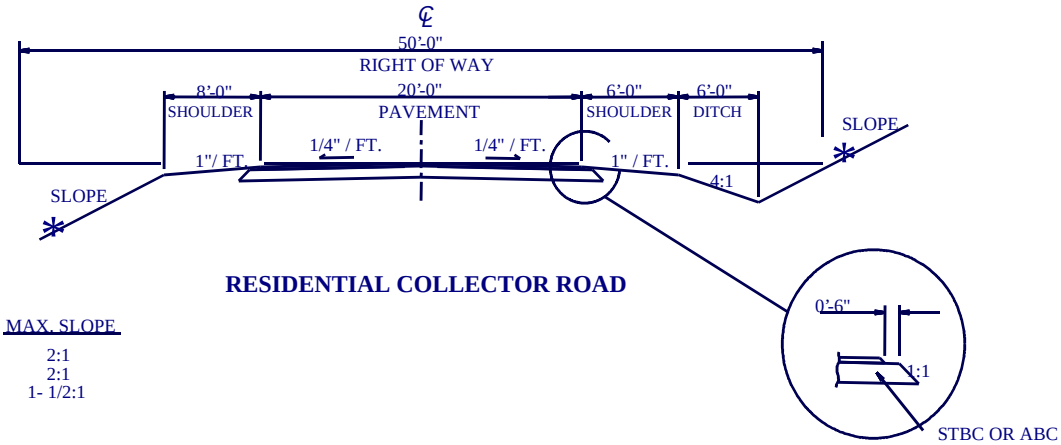

RESIDENTIAL COLLECTOR ROAD

* TERRAIN	MAX. SLOPE
LEVEL	2:1
ROLLING	2:1
HILLY	1- 1/2:1

WIDTH OF ROAD

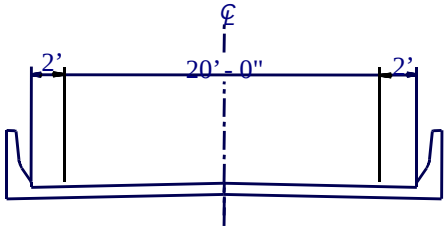

BRIDGE TYPICAL SECTION

FIGURE 1: CROSS-SECTION-SHOULDER SECTION

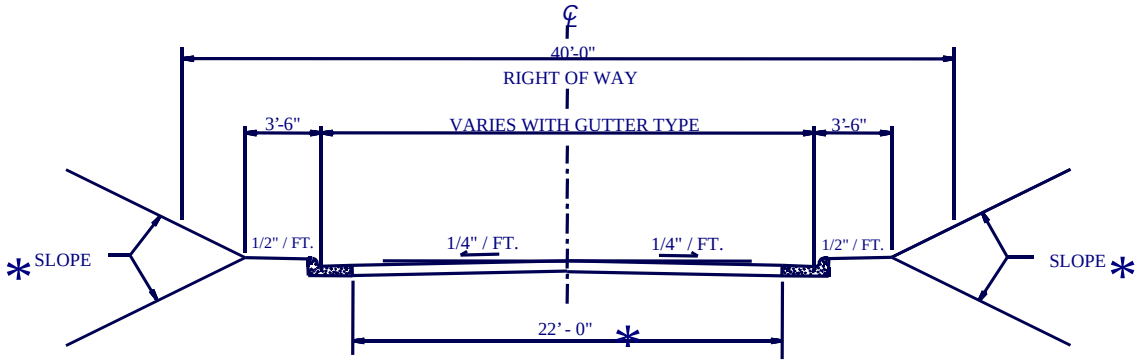

A. LOCAL RESIDENTIAL ROAD

* NOTE:
ON A MAXIMUM OF TWO-TENTHS OF A MILE IN LENGTH, 18' OF PAVEMENT MAY BE USED

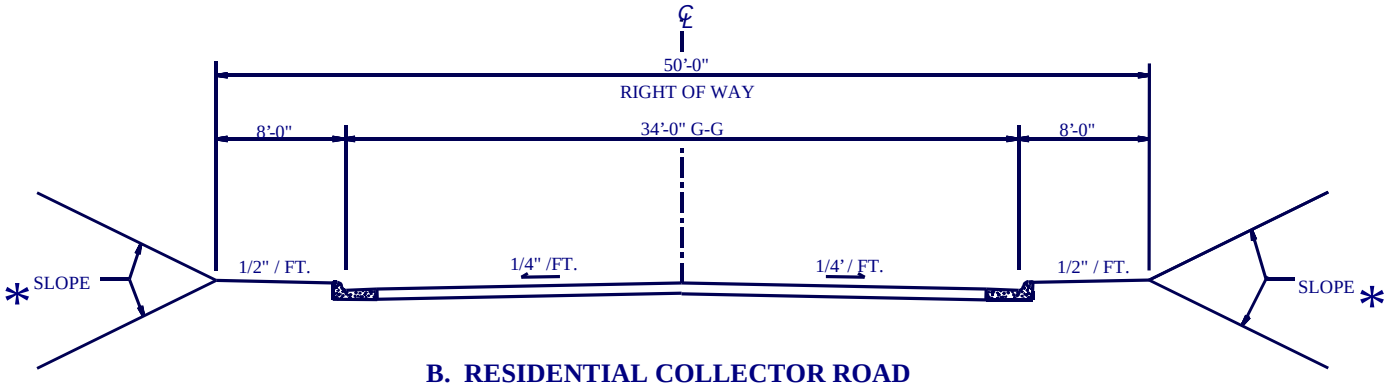

B. RESIDENTIAL COLLECTOR ROAD

*

TERRAIN	MAX SLOPE
LEVEL	2:1
ROLLING	2:1
HILLY	1-1/2:1

NOTE:

FOR BOTH 'A' & 'B',REQUEST FOR TYPICAL SECTIONS APPROVALS BY THE DEPARTMENT OF TRANSPORTATION THAT INCLUDES SIDEWALKS OR FUTURE SIDEWALKS WILL BE REVIEWED INDIVIDUALLY BY THE DISTRICT ENGINEER

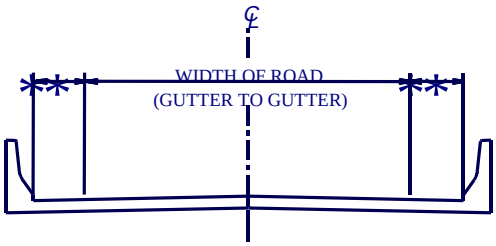

**

SPEED LIMIT	OFFSET
< 45 MPH	0'
≥ 45 MPH	2'-0"

C. BRIDGE TYPICAL SECTION WITHOUT SIDEWALK

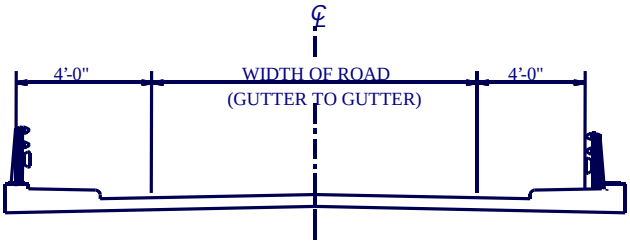

D. BRIDGE TYPICAL SECTION W/SIDEWALK

FIGURE 2: CROSS SECTION: CURB & GUTTER SECTION

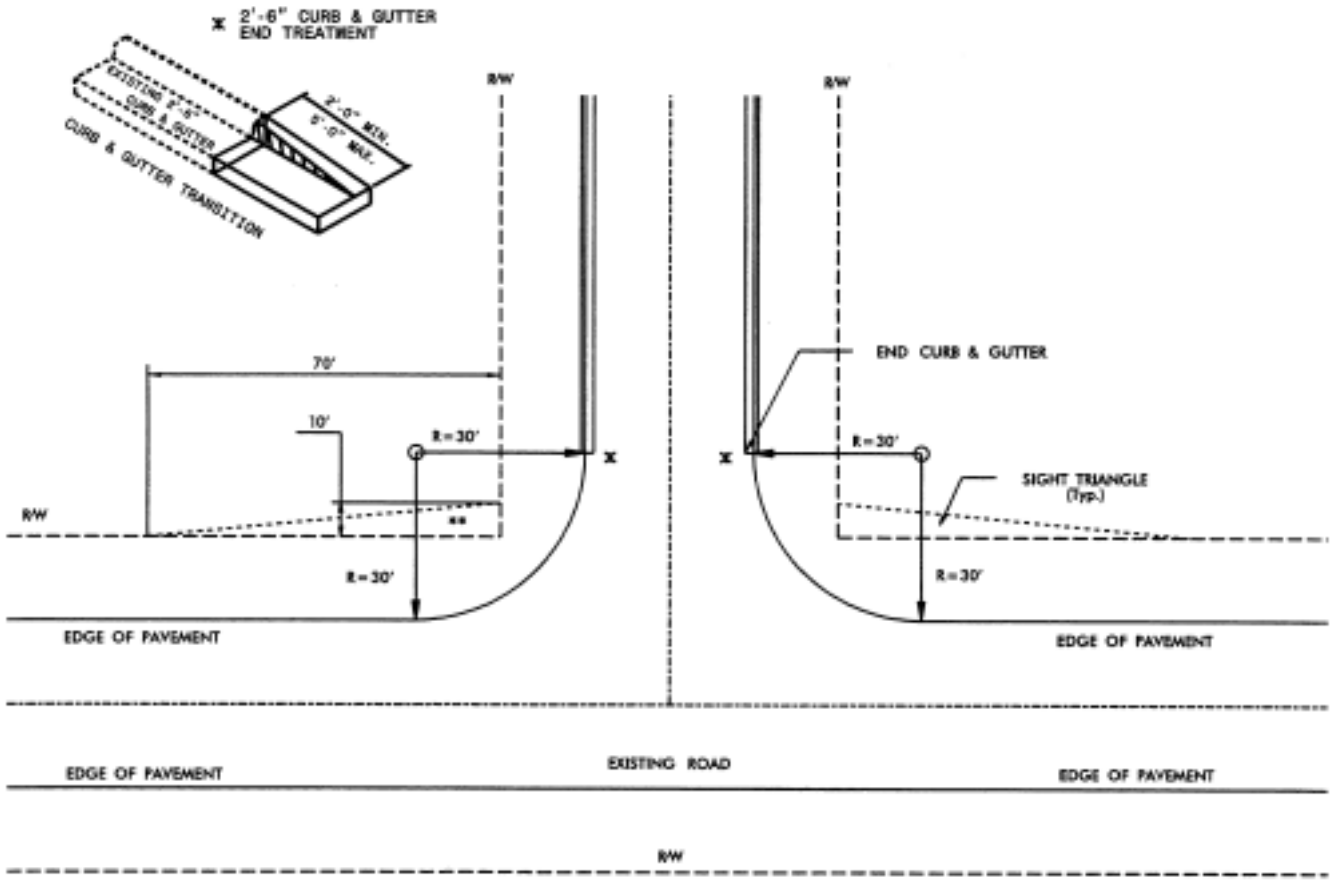

** NOTE: Permanent Drainage easements may be required to accomodate drainage beyond the right-of-way.

FIGURE 3

RECOMMENDED ROAD CONNECTION

NEW LOCAL RESIDENTIAL ROAD OR RESIDENTIAL COLLECTOR ROAD WITH CURB & GUTTER AND EXISTING STATE MAINTAINED ROAD WITH SHOULDER SECTION

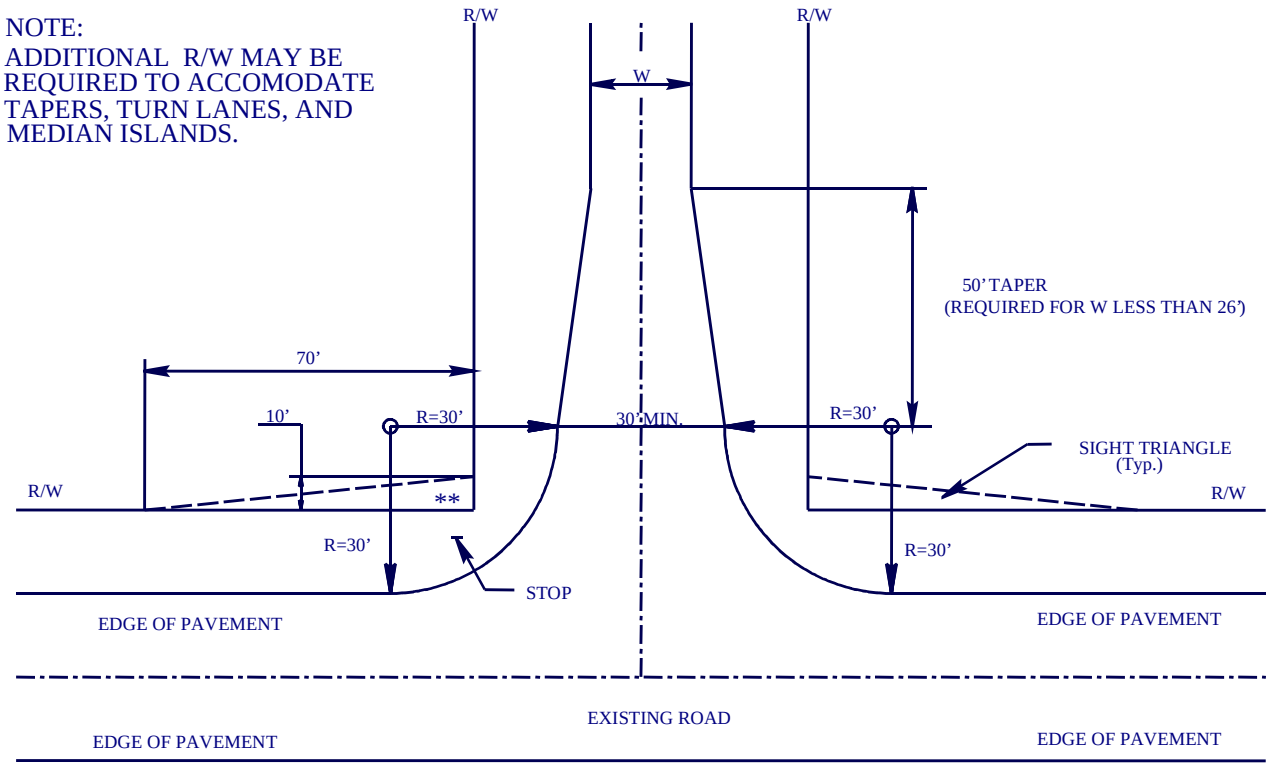

**NOTE: Permanent Drainage easements may be required to accomodate drainage beyond the right-of-way.

FIGURE 4

RECOMMENDED ROAD CONNECTION

NEW LOCAL RESIDENTIAL ROAD OR RESIDENTIAL COLLECTOR ROAD AND EXISTING STATE MAINTAINED ROAD WITHOUT CURB AND GUTTER

STOP CONDITION

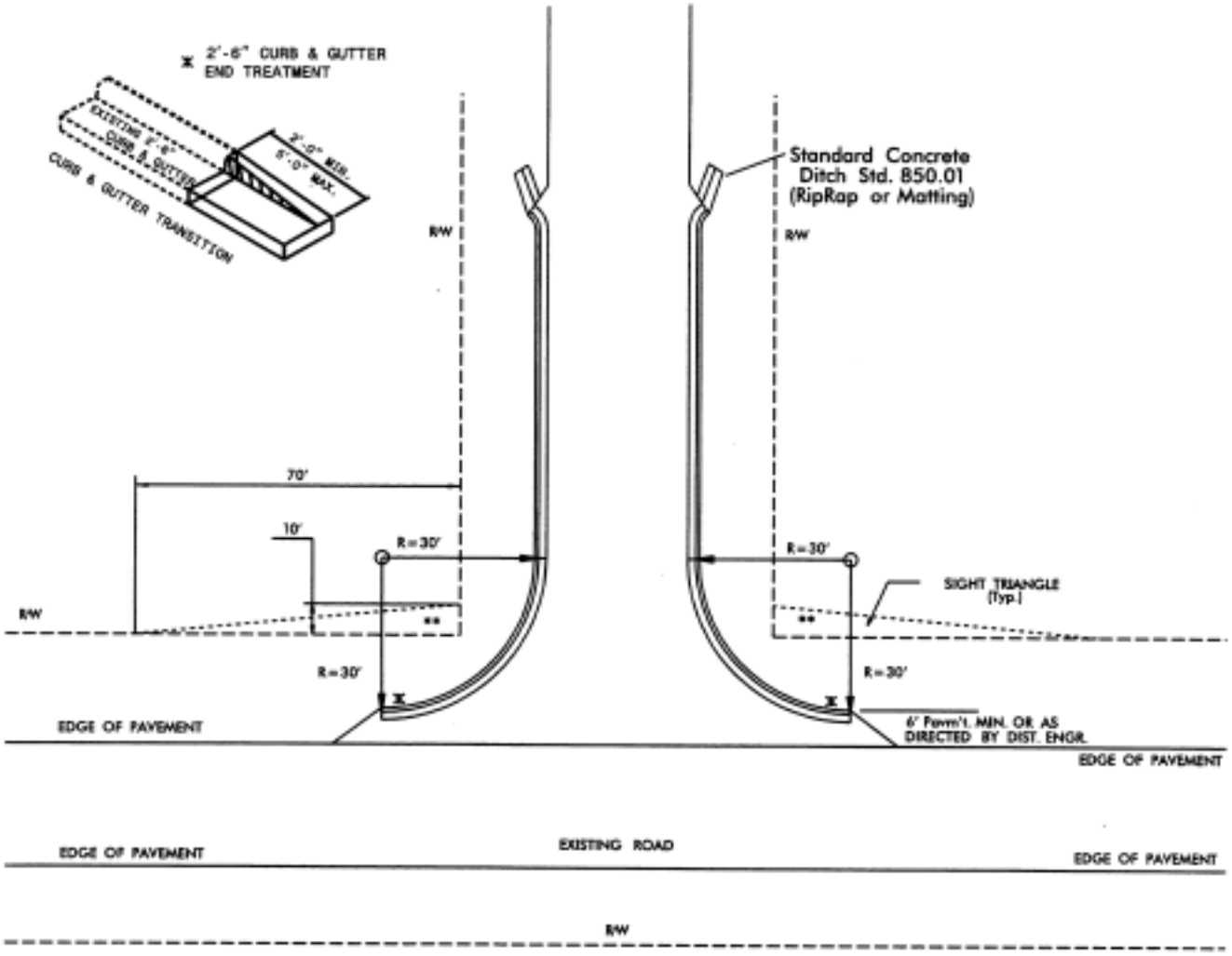

** NOTE: Permanent Drainage easements may be required to accomodate drainage beyond the right-of-way.

RECOMMENDED ROAD CONNECTION
WITH CURB AND GUTTER

x SEE ISLAND DETAIL IF AN INTERIOR
ISLAND IS TO BE INSTALLED

FIGURE 5

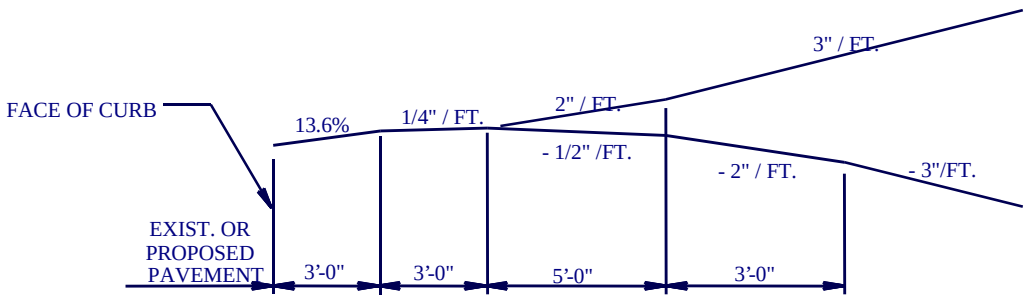

A. CURB & GUTTER SECTION

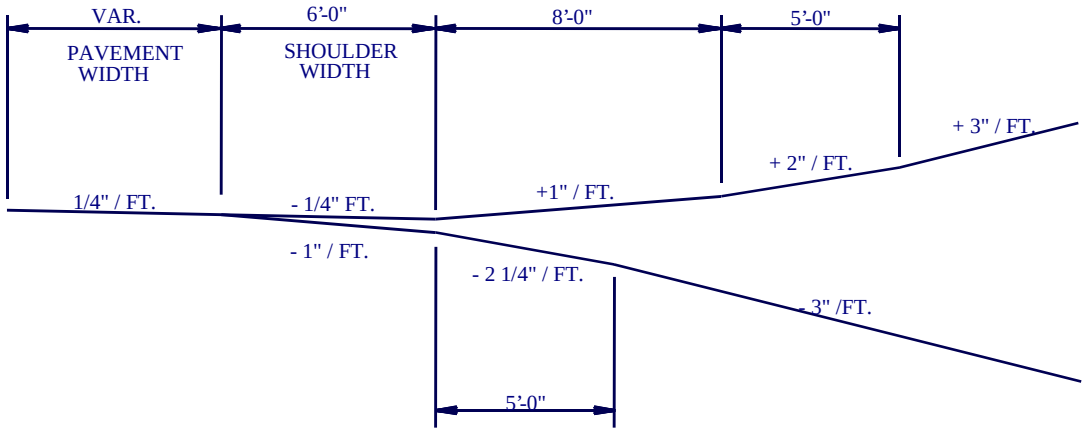

B. SHOULDER SECTION

FIGURE 6

DRIVEWAY TURNOUT GRADES

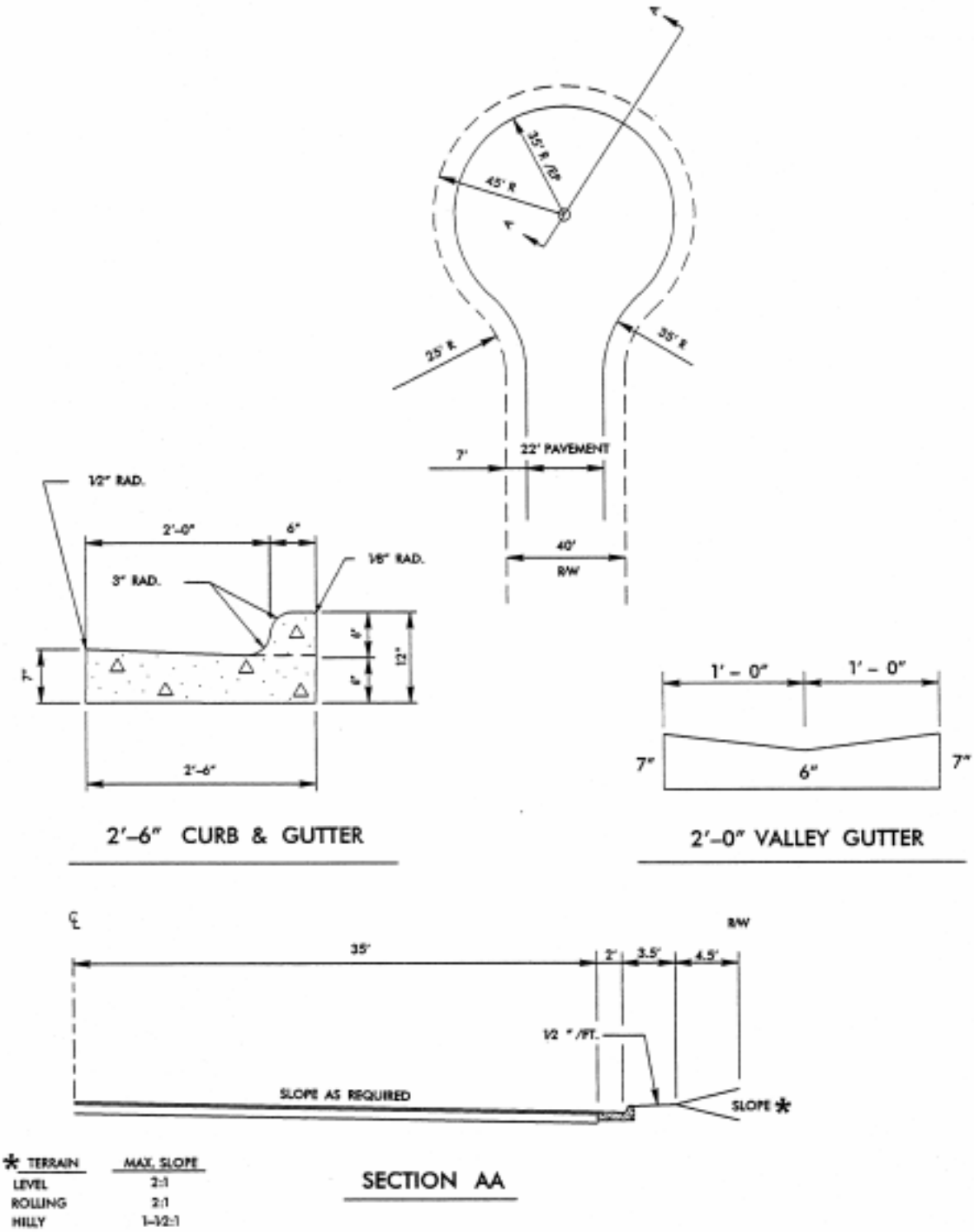

FIGURE 7
SYMMETRICAL CUL-DE-SAC WITH
CURB & GUTTER

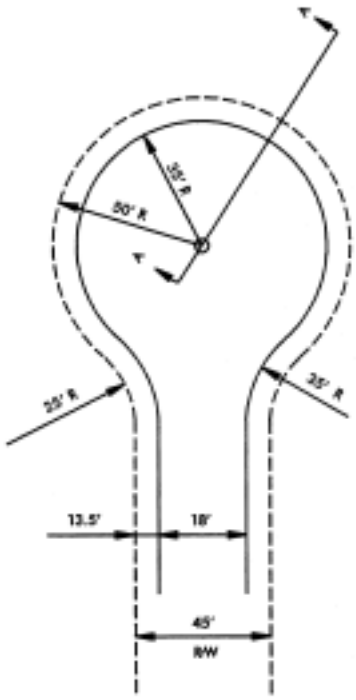

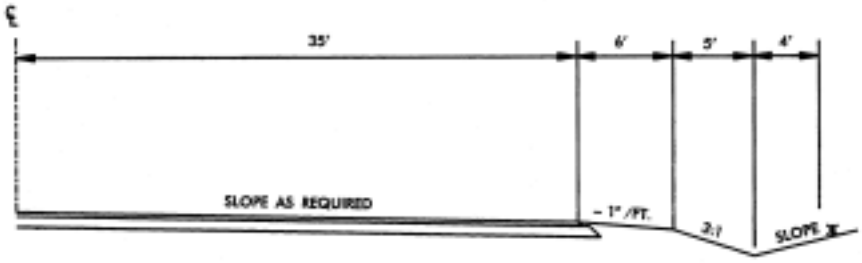

TERRAIN	MAX. SLOPE
LEVEL	2:1
ROLLING	2:1
HILLY	1-1/2:1

SECTION AA

FIGURE 8

SYMMETRICAL CUL-DE-SAC

NO CURB & GUTTER

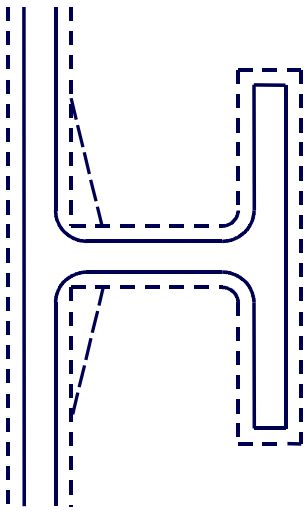

"T" CUL-DE-SAC

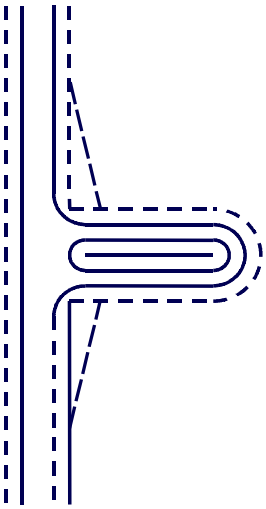

"LOOP" ROAD

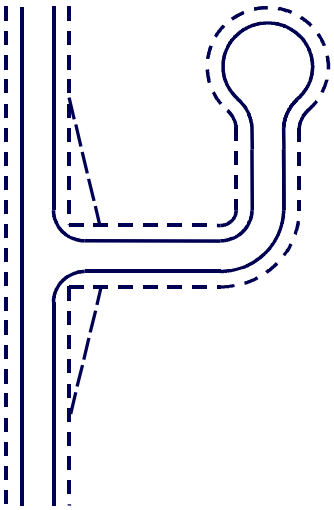

"L" CUL-DE-SAC

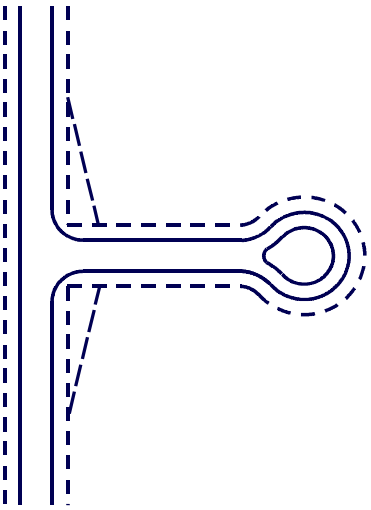

CUL-DE-SAC WITH INTERIOR ISLAND

NOTE: Permanent Drainage easements may be required to accomodate drainage beyond the right-of-way. Cul-de-sac designs other than the "Bulb" End Design will be subject to the approval of the Divison Engineer after review on an individual basis.

FIGURE 9

EXAMPLES OF MINOR

RESIDENTIAL CUL-DE-SAC DESIGNS

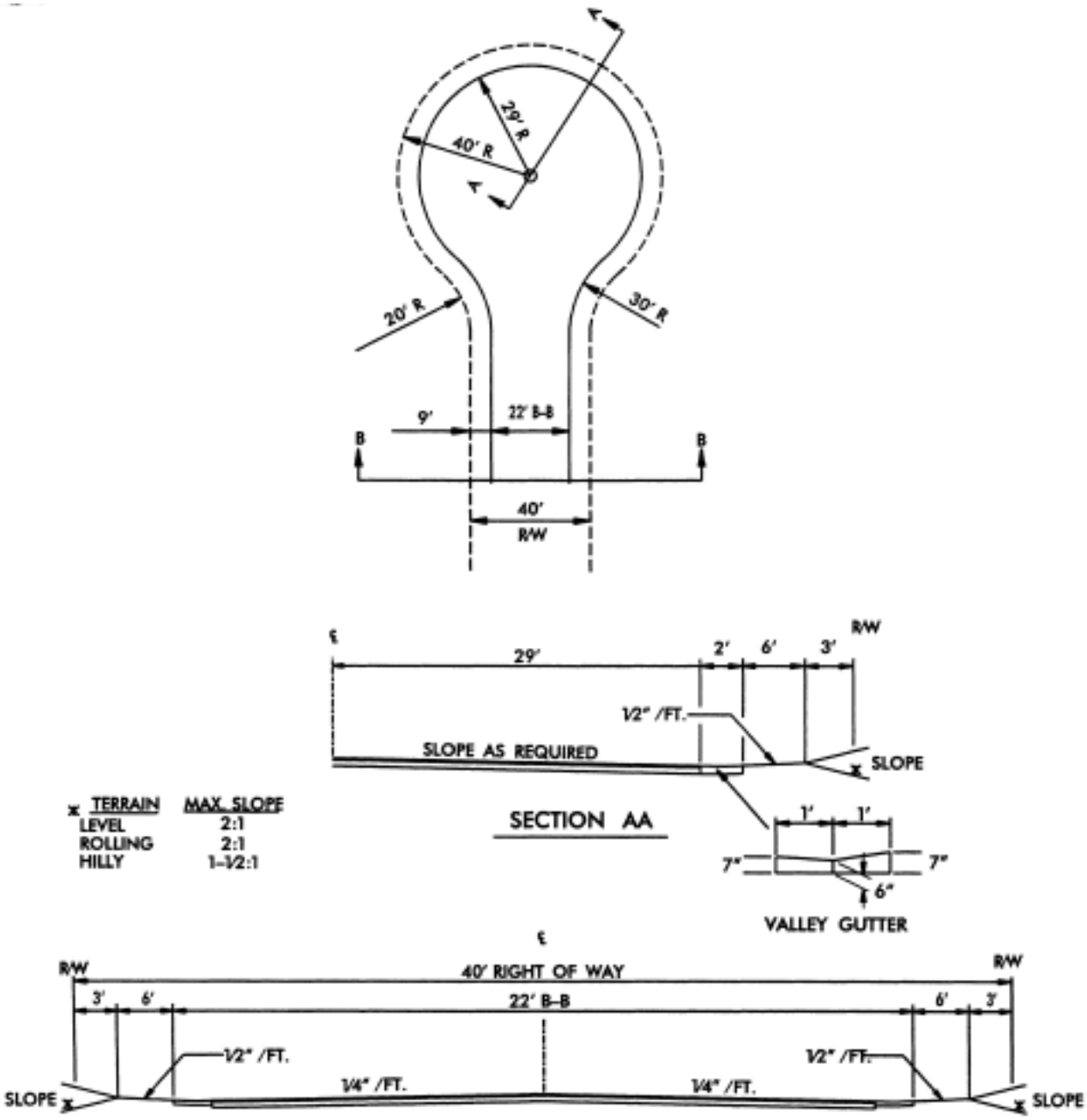

NOTE: THIS DESIGN IS LIMITED TO LOOP ROADS AND CUL-DE-SACS 0.2 MILE OR LESS IN LENGTH.

FIGURE 10

SYMMETRICAL CUL-DE-SAC WITH 2'-0" VALLEY GUTTER

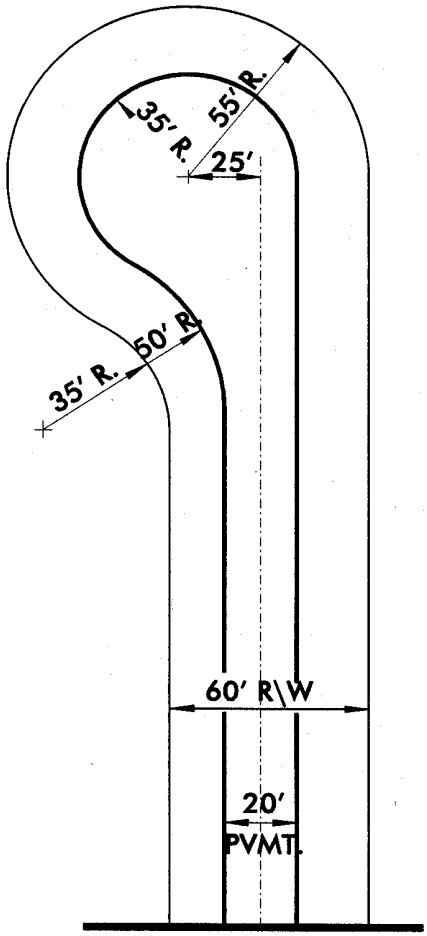

OFFSET CUL–DE–SAC
DESIGN (60 FT. R/W)

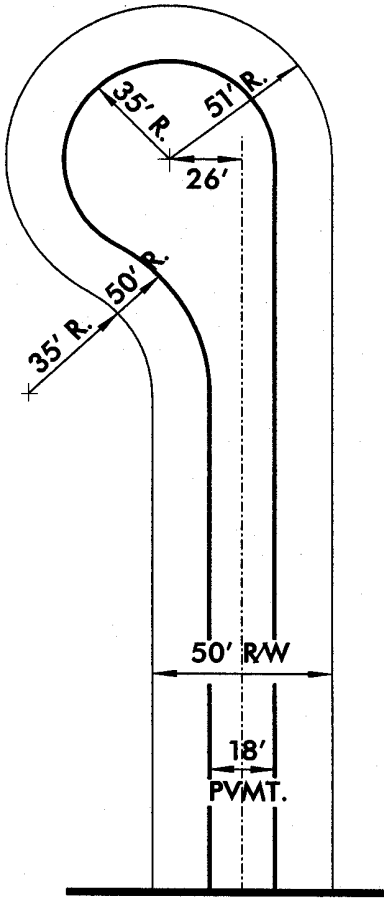

OFFSET CUL–DE–SAC
DESIGN
(50 FT. R/W or 45 FT. R/W)

FIGURE 11
OFFSET CUL–DE–SAC DESIGN

NOTE: THESE TYPICALS MAY BE LEFT OR RIGHT AND MAY BE BUILT WITH 45' RIGHT OF WAY.

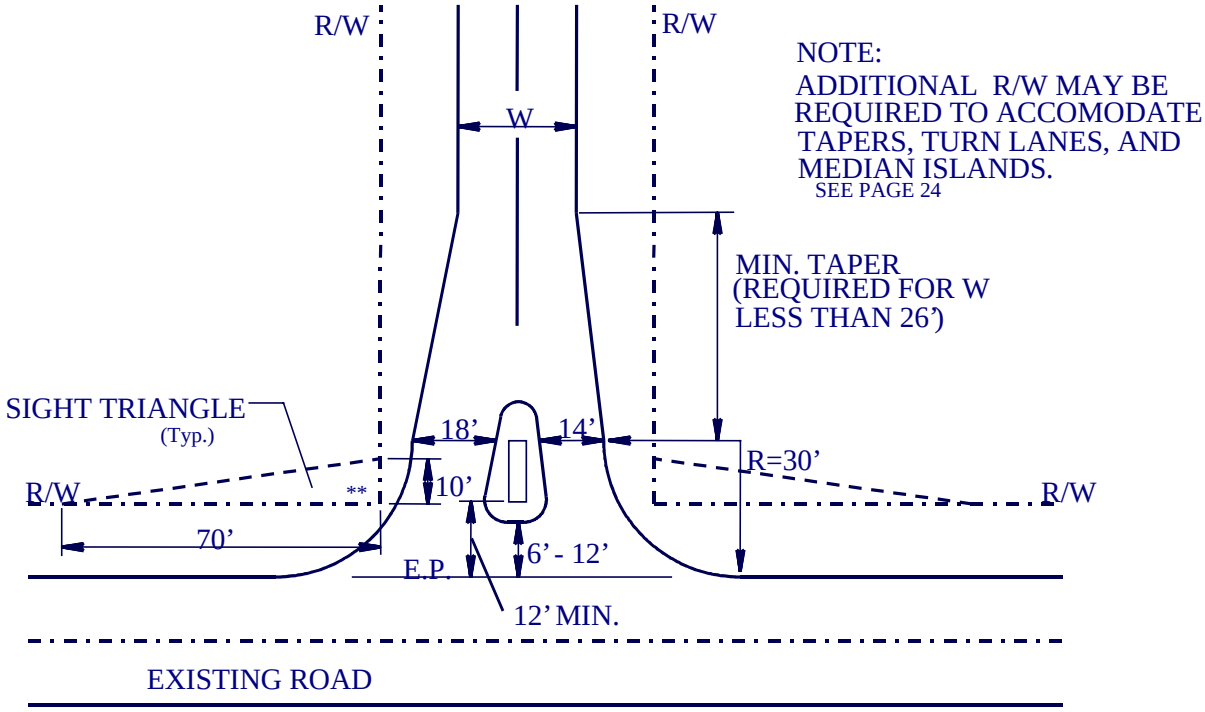

STOP CONDITION

RECOMMENDED ROAD CONNECTION WITH INTERIOR ISLAND

**NOTE: Permanent Drainage easements may be required to accomodate drainage beyond the right-of-way.

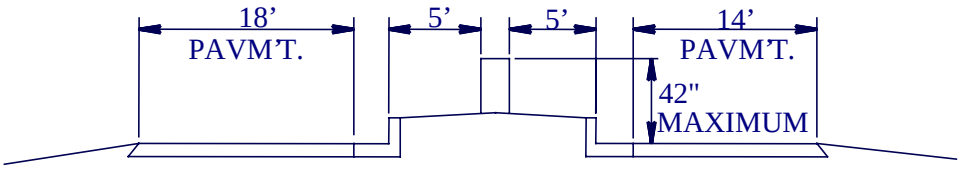

DETAIL SECTION VIEW OF INTERIOR ISLAND AND MARKER

FIGURE 12